TECAPRES®

Ø50mm
920daN

TPKFR 1000

VDI SAFETY

PED 2014/68/UE

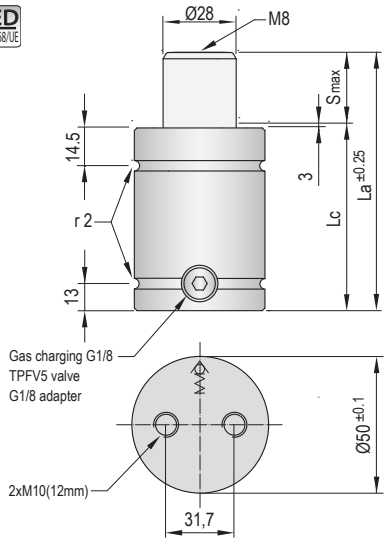

Pressure medium	Nitrogen (N_2)
Max. charging pressure	150 Bar
Min. charging pressure	35 Bar
Rod seal area	6,16 cm²
Operating temperature	0ºC - 80ºC
Force increase by temperature	0,33 %/ºC
Max. stem speed	1,6 m/s
Maintenance kit	Kit KFR1000
RENAULT EM24.54/700/F	**PSA** E24.54/815/G

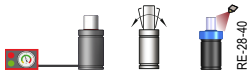

Maximum strokes / minute (at 20ºC)

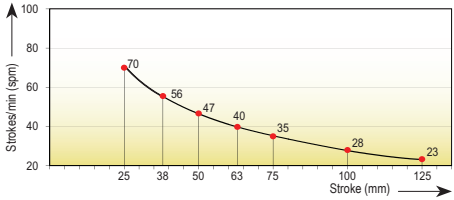

Code	Smax mm	La mm	Lc mm	Fa daN	90% F daN	100% Fc daN	P Bar	V l	Kg
TPKFR 1000x25	25	102	77	920 ±5% (20ºC)	1355	1430	150 (20ºC)	0,044	0,83
TPKFR 1000x38	38	128	90		1380	1460		0,064	1,05
TPKFR 1000x50	50	152	102		1395	1480		0,082	1,22
TPKFR 1000x63	63	178	115		1405	1490		0,102	1,36
TPKFR 1000x75	75	202	127		1410	1495		0,121	1,50
TPKFR 1000x100	100	252	152		1415	1505		0,159	1,92
TPKFR 1000x125	125	302	177		1420	1515		0,198	2,20

Force/stroke ratio

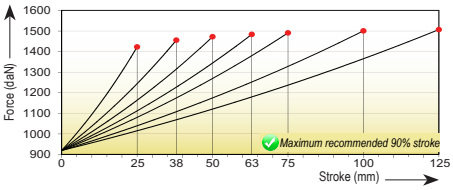

Initial force/charging pressure ratio

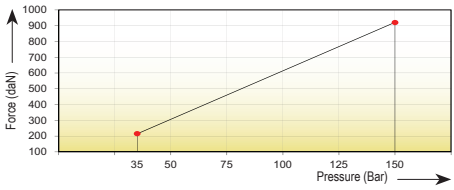

Assembly possibilities

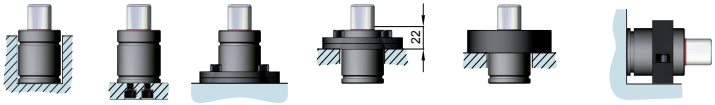

Follow guidelines Page 287

DROP-IN · SCREWS · FS 50 · FSC 50 · FS 50 · FSC 50 · FRS 50 · FI 50 · FI 50/1